c. If mounted at an angle between 60 degrees and 90 degrees tipped away form the viewer, the center line of screens and other screen deviced shall be located a maximum of 34" above grade. Sec 1117B.7.3.3

NOTE: ATMs allowed to be unregulated as to height in Sections 1117B.7.4 through 1117B.7.4.3 are also exempt from requirmemets of Section 1117B.7.5.

5. Where one ATM is provided at a location, it shall meet the specifications of Section 4.34 of the Americans with Disabilities Act Accessibility Guidelines (ADAAG), as follows: Sec 1117B.7.4.1

a. The ATM shall be located so that a clear floor space of 30" by 48" is provided to allow a person using a wheelchair to make a forward or parallel approach, or both (48" by 48"), to the machine. Sec 1117B.7.4.1.1

b. If only a forward approach is possible, operable parts of all controls shall be placed within 48" of the floor. See section 1118B.5 for forward reach over an obstruction. Sec 1117B.7.4.1.2

c. If only a parallel approach is possible and the reach depth to the operable parts of any control as measured from the vertical plane perpendicular to the edge of the unobstructed clear floor space at teh farthest protrusion of the ATM or surround is not more than 10", the maximum height to operable parts of any control from the floor shall be 54". Sec 1117B.7.4.1.3

d. If only a parallel approach is possible and the reach depth to the operable parts of any control as measured fromthe vertical plane perpendicular to the edge of the unobstructed clear floor space at teh farthest protrusion of the ATM or surround is more than 10", the maximum height to the operable parts of any contol from the floor shall be . Sec 1117B.7.4.1.3. Fig 11B-5D. Table 11B-6.

e. If both a forward and parallel approach are possible, operable parts of controls shall be placed within at least one of the reach ranges specified in Sections 1117B.7.4.1.2 or 1117B.7.4.1.3.

f. Where bins are provided afor envelopes, waste paper, or other purposes, at lest one of each type provided shall comply with the application reach ranges specified in Section 1117B.7.4.1.2, 1117B.7.4.1.3, or 1117B.7.4.1.4. Sec 1117B.7.4.1.5

6. Where two ATMs are provided at a location, one shall comply with Section 1117B.7.4.1 except uhtat the highest operable part shall be 48" maximum. The second ATM is not regulated as to height, including height of display. Sec 1117B.7.4.2

7. Where three or more ATMs are provided, two shall be used to satisfy Section 1117B.7.4.2. For the additional ATMs beyond the first two, at least 50 % shall comply with Section 1117B.7.4.1. The remainder are not regulated as the height, including height of display. If features provided differ from ATM to ATM, all features shall be equally represented among the accessible ATMs. Sec 1117B.7.4.3

8. Instructions and all information for ATM use shall be made accessible to and independently usable by persons with vision impairments. Sec 1117B.7.6

X. CARD-READER DEVICES AT FUEL DISPENSING FACILITIES

NOTE: The requirements contained in this section are applicable to Sec 1102C.

1. New motor vehicle facilities.

2. Existing motor vehicle fuel facilities when remodeling or reconstruction includes removel and replacement of one or more islands and associated piping and tank(s).

3. Existing motor vehicle fuel facilities when remodeling include reconstruction or removel and replacement of fuel islands at facilities that provide free-standing pedestal card readers.

NOTE: Alternate card reader shall be defined as a functionally equal card reader and control directly attached to or an integral part of the fuel dispenser in addition to the primary card reader which is an integral part of the dispenser. Sec 1101C.1

NOTE: Free-standing pedestal is a card-reading device which controls one or more remote fuel dispensers that have no card reader as an integral part of the fuel dispenser. Sec 1101C.1

NOTE: Level accessible area for the purpose of this section, shall mean a slope of not more than 2 percent in front of the dispensing devicet however, the slope may extend to 5 percent where the enforcing authority determines that, due to unusual site conditions, the 2 percent gradient is not obtainable. Sec 1101C.1

NOTE: Path of travel shall include the clearance requirements stated in Chapter 11B for Wheelchair Passage Width, and Relationship of Maneuvering Clearances to Wheelchair Spaces, except that pump nozzles and hoses may overlap required clearances. Sec 1101C.1

NOTE: Type of motor fuel shall mean gasoline, diesel, compressed natural gas, methanol, electricity, or ethanol. Sec 1101C.1

1. When only one card-reading device is installed for use with any type of motor fuel, it shall meet the requiredf eatures detailed in correction #3 below. Sec 1103C.

2. When more than one card-reading location is available for a specific type of motor fuel, a minimum of two for that type shall meet the required features detailed in correction #3 below. Sec 1103C.

3. Card-reading devices at motor vehicle fuel facilities shall be accessible by complying with the following feature: Sec 1104C Fig 11C-1 & 11C-2.

a. The highest operable part of each primary or alternate card reader shall be no more than 54" measured from the base of the fuel dispenser. Where card readers are located on free-standing pedestals, the card-reading control function shall be no more than 54" above an accessible level area which is served by an accessible path of travel.

b. An accessible path of travel shall be provided to the abse of all fuel dispensers required to meet the provisions os this section. Such fuel dispensers shall be mounted on the accessible level area.

c. An accessible level area shall be provided which is minimally 30" by 48" level and clear. This area shall be provided within 10" in plan view of the face of the controls and shall be unobstructed by any features except pump nozzles and hoses, with the long side of this space parallel to and centered (+-9") with the face of the card-reader controls.

Y. CONTROLS & OPERATING MECHANISMS

1. Controls and operating mechanisms required to be accessible by Section 1011.1-10 shall comply with the requirements of Section 1117B.6. Sec 1117B.6.1

2. Clear floor space complying with Section 1118B.4 that allows a forward or parallel approach by a person using a wheelchair shall be provided at controls, dispensers, receptacles, and other operable equipment. Sec 1117B.6.2

3. The highest operable part of all controls, dispensers, receptacles, and other oprable equipment shall be places within 48" of the floor but not lower than 15" if forward approached and within 54" but not lower than 9" if side approached. Sec 1117B.6.3

4. Controls and operating mechanisms shall be operable with one hand and shall not require tight grasping, pinching, or twisting of the wrist. The force required to activate controls shall be no greater than 5 pounds of force. Sec 1117B.6.4 & 1507.2a

5. Non-commercial kitchen and counter bar sinks located in common use areas shall have faucet controls and operating mechanisms operable with one hand in accordance with Section 1118B and shall not require grasping, pinching, twisting of the wrist. The force required to activate controls shall be no greater tha 5 plf. Lever-operated, puch-type, and electronically controlled mechanisms are examples of acceptable designs. Self-closign valves are allowed if the faucet remains open for at least 10 seconds. Sec 1508.2

6. Vending machines shall be installed in compliance with Section 1117B.6 through 1117B.6.4. Sec 1126B

Z. HAZARDS & PROTRUDING OBJECTS

1. Abrupt changes in level, except between a walk or sidewalk and an adjacent street or driveway, exceedign 4" in a vertical dimension, such as at planters or fountains located in or adjacent to wlaks, sidewalks, or other pedestrian ways, shall be identified by warning curbs projecting at least 6" in height above the walk or sidewalk surface to warn the blind of a potential drop off. Sec 1024.1

2. When a guardrail or handrail is provided, no warning curb is required when a guiderail is provided centered 3" +- 1" above the surface of the walk or sidewalk, the walk is 5 percent or less gradient, or no adjacent hazard exists. Sec 1024.1 Fig 11B-27(b).

3. Objects projecting form walls with their leading edges between 27" and 80" above the finished floor shall protrude no more than 4" into walks, halls, corridors, passageways, or aisles. Sec 1121B.1 Fig 11B-7A.

4. Objects mounted with their leading edges at or below 27" above the finished floor may protrude any amount into walks, halls, corridors, passageways or aisles. Sec 1121B.1 Fig 11B-7A.

5. Free-standing objects mounted on posts or pylons may overhang 12" maximum from 27" to 80" above the ground or finished floor. Sec 1121B.1

6. Protruding objects shall not reduce the clear width of an accessible route or maneuvering space. Sec 1121B.1

7. Walks, halls, corridors, passageways, aisles or other circulation spaces shall have 80" minimum clear head room. Sec 1121B.2 Fig 11B-7A.

8. Any obstruction that overhangs a pedestrian way shall be a minimum of 80" above the walking surface as measured from the bottom of hte obstruction. Sec 1024.2 Fig 11B-28.

9. Where a guy support is used parallel to a pathe of travel, including, but not limited to , sidewalks, a guy brace, sidewalk guy or similar device shall be used to prevent an overhanging obstruction as defined. Sec 1024.2

10. Transit boarding platforms shall have a detectable warning texture extending the full lenght of the loading area. The detectable warning texture shall have the following features: Sec 1024.3

a. Width 24" to 36", places at the edge of hte drop-off or safe area. Sec 1024.3

b. Duarble, slip-resistant material having a surface texture composed of raised, truncated domes in s staggered pattern with a diameter of nominal 0.9" at the base tapering to 0.45" at the top, a height of nominal 0.2", and a center-to-center spacing of nominal 2.35" in compliance with Figure 11B-23. "Nominal" as used here shall be in accordance with California State Referenced Standards Code Section 12-11-102. The detectable warning shall contrst visually with adjoining surfaces, either light on dark or dark on light. The material used to provide contrast shall be an integral part of the walking surface. Warning surfaces shall differ from adjoining walking surfaces in resiliency or sound on cane contact. This surface shall be reserved for warning. Sec 1024.3

c. Color yellow conforming to Federal Color No 33538, as shown in Table IV of Standard No. 595B. Where the color value contrast between the yellow warning and the main walking surface is less htan 70%, a 1" wide black strip shall seperate the yellow warning from the main walking surface. Percent of contrast shall be determined by the formula in Section 1024.3. Sec 1024.3

11. At transit boarding platforms, the pedestrian access shall be identified with a detectable directional texture. This detectable directional texture shall comply with Figure 11B-23B and shall be 0.1" in height that tapers off to 0.04", with bars raised 0.2" from the surface. The raised bars shall be 1.3" wide and 3.0" from center-to-center of each bar. This surface shall differ from adjoining walking surfaces in resiliency or sound on cane contact. The color of the directional texture shall comply with Section 1024.3. This surface will be placed directly behind the yellow detectable warning texture specified in Secion 1024.3, aligning with all doors of the transit vehicles, where passengers will embark. The width of the directional texture shall be equal to the width of the transit vehicle's door opening. The depth of the texture shall not be less than 36". Sec 1024.4. Fig 11B-23B.

12. If a walk crosses or adjoins a vehicular way, and the walking surfaces are not seperated by curbs, railings, or other elements between the pedestrian areas and vehicular areas, the boundary between the areas shall be defined by a continuous detectable warning which is 36" wide, complying with Section 1024.3. Sec 1024.5

AA. SPACE ALLOWANCE & REACH RANGES

1. The minimum clear floor or ground space required to accommodate a dingle, stationary wheelchair and occupant is 30" by 48". (The minimum floor or ground space shall be increased to 42" by 48" when such space is perpendicular to an adjacent seating space). The minimum clear floor or ground space for wheelchairs may be positioned for forward or parallel approach to an object. Clear floor or ground space for wheelchairs may be part of the knee space required under some objects. Sec 1117B.2.3 & 1118B.4.1 Fig 11B-5A & 13.

2. One full unobstructed side of the clear floor or ground space for a wheelchair shall adjoin or overlap an accessible route or adjoin unother wheelchair clear floor space. If a clear floor or ground space for a wheelchair is located in an alcove or otherwise confined on all or part fo three sides, additional meaneuvering clearances shll be provided. Sec 1117B.2.4 & 1118B.4.2. Fig 11B-5A.

3. The space required for a wheelchair ot make a 180 degree turn is a clear space of 60" diameter or a T-shaped space. Sec 1118B.3. Fig 11B-12(a) & (b).

4. The minimum clear width required for a wheelchair to turn around an obstruction shall be 36" where the obstruction is 48" or more in lenght and 42" and 48" where the obstruction is less than 48" in length. Fig 11B-5E.

5. the minimum clear width for sindle wheelchair passage shall be 32" at a point (24" maximum length) and 36" continuosly. Sec 1118B.1 Fig 11B-10.

6. The minimum width for two wheelchairs to pass is 60". Sec 1118B.2 Fig 11B-11.

7. If the clear floor space only allows forward approach to an object, the maximum high forward reach allowed shall be 48". See Figure 11B-5C(a). The minimum low forward reach is 15". If the high forward reach is over an obstruction, reahc and clearances shll be as hown in Figure 11B-5C(b). Sec 1118B.5

8. If the clear floor space allows parallel approach by a person in a wheelchair, the maximum high side reach allowed shall be 54" and hte low side reach shall be no less than 9" above the floor as shown in Figures 11B-5D(a) & (b). If the side reach is over and obstruction, the reach and clearances shall be as shown in figure 11B-5D(c). Sec 1118B.6

BB. EMPLOYEE WORK AREAS & WORK STATIONS

NOTE: 1. General employee areas are "those areas commonly used by multiple employeess uch as restrooms, break rooms, conference and meeting space, etc". Even when these areas are restricted for employee use only, they must comply with Title 24 accessbility requirements.

2. Specific work stations is intended to mean "places where individuals do their work, such as a chef's chopping block in a commerical restaurant or a computer terminal in an office". The work stations are not required to be accessible themselves, except that aisle and floor an level requirements must be met and entryways must be at least 32" in clear width.

1. Specific work stations, with the exception of work stations in sales facilities, checkstands, ticket booths, and other work stations with specific requirements contained in other portions of the regulations, need only comply with aisle width and floors and levels, and entryways shall be 32" in clear width. Sec 1123B.2

2. Employee work areas shall be accessible by means of a 36" minimum aisle and a 32" minimum clear opening door width. Sec 1105B.3.2.3, 1105B.3.3.2, & 1108B.5

3. Employee areas shall conform to all requirements of the Divsion of the Stte Architect/Access Compliance Section in the California Building Code, Plumbing Code, and Electrical Code. Sec 1123B.1

CC. FIXED OR BUILT-IN SEATING, TABLES, & COUNTERS

1. Where fixed or built-in seating, tables, or counters are provided for the public, and in general employee areas, 5% but never less than 1 muct be accessible, as required in Section 1122B.

2. The tops of tables and counters shall be 28" to 34" form the floor or ground. Sec 1122B.4

3. If seating for people in wheelchairs is provided at fixed tables or counters, knee spaces at least 27" high, 30" wide, and 19" deep shall be provided. Sec 1122B.3 Fig 11B-13.

4. If seating spaces for people in wheelchairs are provided at fixed tables or counters, clear floor speae complying with Section 1118B.4 shall be provided. Such clear floor space shall not overlap knee space by more than 19". Sec 1122B.2 Fig 11B-13.

5. Where a single counter contains more than one transation station,s uch as (but not limited to) a bank counter with multiple teller windows or a retail sales counter with multiple cash register stations, at least 5%, but nver less than 1, of each type of station shall be located at a section of counter that is at least 36" long and no more than 28" to 34" high. Sec 1122B.4

DD. SIGNS & IDENTIFICATION

NOTE: The International Symbol of Accessibility shall be the standard used to identity facilities that are accessible to and usable by physically disabled persons as set forth in Title 24 and as specifically required below. Sec 1117B.5.1.1 Fig 11B-6.

1. The International Symbol of Accessibility shall consist of a white figure on a blue background. The blue shall be equal to Color No. 15090 in Federal Standard 595B. Sec 1117B.5.1.2

2. Letters and numbers on signs shall have a width-to-height ratio of between 3:5 and 1:1 and a stroke width-to-height ration between 1:5 and 1:10. Sec 1117B5.3

3. Characters and numbers on signs shall be sized according to the viewing distance form which they are to be read. The minimum height is measured using an upper case X. Lower case characters are permitted. For signs suspended or projected above the finish floor in compliance with Section 1121B, the minimum character height shall be 3". Sec 1117B.5.4

4. Characters and symbols shall contrast with their background, either light characters on a dark background or dark characters on a light background. Sec 1117B.5.5

5. When raised characters or symbols are used, they shall conform to the following: Sec 1117B.5.6

a. Letters and numbers on signs shall be raised 1/32" minimum and shall be sans-serif uppercase characters accompanied by Grade 2 Braille. Sec 1117B.5.6.1

b. Raised characters or symbols shall be minimum of 5/8" high. Sec 1117B.5.6.2

c. Pictorial symbol signs (pictograms) shall be accompanied by the equivalent verbal description placed directly below the pictogram. The border dimension of the pictogram shall be a minimum of 6" in height. Sec 1117B.5.6.3

6. Contracted Grade 2 Braille shall be used wherever Braille symbols are specifically required in other portions of these regulatons. Dots shall be 1/10" on centers in each cell with 2/10" space between cells. Dots shall be raised a minimum of 1/40" above the background. Sec 1117B.5.2

7. All building entrances that are accessible to and usable by persons with disabilities and at every major junction along or leading to an accessible route of travel shall be identified with a sign displaying the Internation Symbol of Accessibility and with additional directional signs, as required, to be visible to persons along approaching pedestrian ways. Sec 1117B.5.7 & 1127B.3

8. When permanent identificaiton is provided for rooms and spaces, raised letters shall be provided and shall be accompanied by Braille in conformance with Section s1117B.5.6 through 1117B.5.6.3. Signs shall be installed on the wall adjacent tothe latch side of the door. Where there is no wall space on the latch side, including at double leaf doors, signs shall be placed on the nearest adjacent wall, preferably on the right. Mounting height shall be 60" above the finished floor to the centerlin of the sign. Mounting location shall be determined so that a person may approach within 3" of signage without encountering protruding objects or standing within the swing of a door. Sec 1117B.5.9

9. Pole supported pedestrian traffic control buttons shll be identified with color coding consisting of a textured horizontal yellow band 2" in width encircling the pole, and a 1" wide dark border band above and below this yellow band. Color coding should be placed immediately above the control button

EE. ASSEMBLY OCCUPANCIES

1. Provide seats/spaces for people using wheelchairs. Sec 1104B.3.4.1 & 1104B.3.4.2. Table 11B-1.

2. Provide seats for semi-ambulant persons (at least 1 seating but no fewer than two) which provide at least 24" of clear leg space between the front of the seat to the nearest obstruction or the back of the seat immediately in front. Sec 1104B.3.8

3. One percent, but not less than one, of all fixed seats shall be aisle seats with no armrests on the aisle side, or removable or folding armrests on the aisle side. Each such seat shall be identified by a sign or maker. Signage notifying patrons of the availability of such seats shall be posted at the ticket office. Sec 1104B.3.4.1

4. At least one companion fixed seat shall be provided next to each wheelchair seating area. Sec 1104B.3.5

5. When the seating capacity exceeds 300, wheelchair spaces shall be provided in more than one location. In addition, regardless of seating capaity, wheelchair spaces shall be provided in a variety of locations so as to provide persons with disabilities a choice of admission prices and lines of sight otherwise available to memebers of the general pubici. Sec 1104B.3.3 & 1104B.3.5

6. Each wheelchair seat/space shall adjoin an egress aisle on at least one side. Sec 1104B.3.5

7. Eahc wheelchair seat/space shall be level and provide a minimum clear floor or ground space o f33" in width and 60" (side access) or 48" (front or rear access) in depth. Sec 1104B.3.4.3. & 1104B.3.6. Fig 11B⅛15.

8. Readily removable seats may be installed in wheelchair spaces when such spaces are not being use dto accommodate wheelchair users. Sec 1104B.3.7

9. Stages, enclosed and unclosed platforms, and orchestra pits shall be made accessible to persons with disabilities. Sec 1104B.3.11

10. An accessible route shall connect wheelchair seating locatons with performing areas, including stages, arena floors, dressing rooms, locker rooms, and other spaces used by performers. Sec 1104B.3.10

11. Paticipation areas shall be accessible to persons with disabilities, Provide wheelchair access to . Sec 1104B.4.3.

12. Customer and employee sides of ticket booths and of concession and refreshment sales facilities shall be made accessible to persons with disabilities (auditoriums, assembly halls, theaters, adn related facilities). Sec 1104B.3.12

13. The customer side of a ticket booth shall be, and employee side may be, accessible to persons with disabilities (stadiums, grandstands, bleachers, athletic pavillions, gymnasiums, and miscellaneous sport-related facilities). Sec 1104B.4.2

14. Clubrooms and spectator and/or participant sanitary and/or locker facilities shall be accessible to persons with disabilities. Sec 1104B.4.4 & 1104B.4.5

15. Accessible seating ot accommodations in places of public amusement and resort (theaters, concert halls and stadiums) shall be provided in a variety of locations so as to provide persons with dissabilities a choice of admission prices and lines of sight otherwise available to members of the general public.

16. Wheelchair areas shall be an integral part of any fixed seating plan and shall be arranged so as to provide person with dissabilities a choice of admission prices and line of sight comparable of those for members of the general public. when the seating capacity exceeded 300, wheelchair spaces shall be provided in more than one location and must comply with Sect. 1104b.3.3.

FF. ASSISTIVE-LISTENING SYSTEMS IN ASSEMBLY OCCUPANCIES

NOTE: Types of assistive-listening systmes include but are not limited to, audio-induction loops, radio frequency systems (AM or FM), and infrared transmission. Sec 1104B.2.2

NOTE: The requirements for assistive-listening systems do not apply to systems used exclusively for paging, or background music, or a combination of these two used. Sec 1104B.2 Exc.

1. Assembly areas, conference rooms and meeting rooms shall be provided with assistive-listening systems or people with hearing impairments. Sec 1104B.2

2. Provide personal receivers for people with hearing impairments (at least 4% of the total number of seats but no fewer than two.) Sec 1104B.2.1

3. If the assistive-listening system provided is limited to specific areas or seats, such areas or seats shall be within a 50-foot viewing distance of the performing area. Sec 1104B.2.3

4. If portable assistive-listenign systems are used for conference or meeting rooms, the system may serve more than one room. However, permanently installed assistive-listening systems are required in areas if (1) they accommodate at least 50 persons, or have audio-amplification systems, and (2) they have fixed seating. Sec 1104B.2.6

5. A sign which includes the Internation Symbol of Access for Hearing Impaired and wording that states " Assistive-listening System Available" shall be posted in a prominent place indicating the availability of assistive-listening devices. Sec 1104B.2.4 Fig 11B-14.

GG. RELIGIOUS FACILITIES

1. Wheelchair access shall be provided to enclosed and unenclosed raised platforms and stages, choir rooms, choir lofts, performing areas, and other similar areas. Sec 1104B.6.2.2. & 1104B.6.3

2. Provide seats/spaces for people using wheelchairs at . Sec 1104B.6.2.1 & 1104B.3.1

3. Classrooms and offices shall have entry doors that conform to the requirements in Chapter 10. Sec 1104B.6.4

HH. SALES FACILITIES

1. Employee work stations shall be located on accessible levels and shall be sized and arranged to provide access to employees in wheelchairs. Sec 1110B.1.2

2. The customer side of sales and checkout stations shall be accessible. Sec 1110B.1.2

3. Provide accessible checkstands. Checkstands, including service counters requiring a surface for transactions, shall be made accessible by providing a minimum 36" aisle on the customer side of the checkstand with an adjoining counter height not exceeding 38" above the finished floor and with the top of the counter lip not to exceed 40" above the finished floor. Sec 1110B.1.3. Table 11B-2.

4. Accessible checkstands shall be identified by a sign clearly visible to those in wheelchairs which displays the International Symbol of Accessibility in white on a blue background and stating "This checkstand to be open at all times for customers with disabilities". Sec 1110B.1.3

5. Where "quick" checkstands are provided, at least one shall be accessible. Sec 1110B.1.3

6. In existing buildings being remodeled, at least one checkout aisle shall be accessible in facilities with under 5000 square feet of selling space. In an existing building, with 5000 or more square feet of selling space, at least one of each design of checkout aisle shall be made accessible when altered until the number of accessible checkout aisles of each design equals the number required in new construction. Sec 1110B.1.3

7. Where fitting or dressing rooms are provided for make or female customers, patients, employees, or the general public, 5 percent, but never less than one, of dressing rooms for each type o fuse in each cluster of dressing rooms shall be accessible by providign the following: Sec 1110B.1.7

a. Entry doors conforming to the requirements of Section 1004 and aisles leading to such doors conforming to Section 1014.1 & 1014.2

b. Full-length mirrors at least 18" wide by 54" high, the bottom of which is no higher than 20" from the floor, and mounted in a position affording a view to a person on the bench as well as to a person in a standing position.

c. Clothing hooks located no higher than 48" from the floor.

d. A 24" by 48" bench mounted on the wall along the longer dimension of the bench, 17" to 19" above the floor with a clear space alongside the bench to allow a person using a wheelchair to make a parallel transfer onto the bench. The structural strngth of the bench and attachments shall comply with Section 1115B.8

e. A minimum clear space within the room of 60" width by 60" length. No door shall encroach into the required space.

8. Where shopping cart theft prevention barriers are utilized they shall conform to the following requirements: Sec 1110B.1.6

a. Each entrance and exit provided for public use shall be accessible to and usable by persons with disabilities. Sec 1110B.1.6.1

b. Shopping cart barriers located at a public entrance or exit shall be designed to provide a clear unobstructed opening at least 32" in width for ingress and egress of persons with disabilities. Sec 1110B1.6.2

c. Where a clear, unobstructed opening is provided, a level area is required on both sides of the clear opening which uxtends a minimum of 44" on each side ofthe opening and is at least 48" in width. Sec 1110B.1.6.4

d. Where gates are used, they shall open in the direction of travel, provide a clear, unobstructed opening 32" in width, and be maintained unlocked during business hours. Gates shall not operate a publicly audible alarm system or require more than 5 foot-pounds of force. Sec 1110B.1.6.3

e. Where a gate is used, the level area in the direction of gate swing shall be a minimum of 60" in width and a minimum of 60" in depth (measured from the gate in a closed position). The level area opposite the gate swing shall be a minimum of 48" in width and a minimum of 42" in depth. Sec 1110B.1.6.5

f. When a gate is used, the bottom of the gate shall be within 3" of the surface of the path of travel. The surface of the gate on each side shall be smooth to present no hazard to persons with disabilities using the gate, and structurally adequate to allow it to be opened with the wheelchair foot pedals. Sec 1110B.1.6.6

g. The path of travel to and through the clear opening or gate shall be designed to prevent barriers from obstructing it and shall be continuously maintained unobstructed during business hours. Also, the design shall specifically prevent parked vehicles from obstructing ingress and egress. Sec 1110B.1.6.7

h. Interior and exterior pedestrian traffic barriers (posts, rails, turnstiles, etc.) shall allow unobstructed travel for persons with disabilities through a 32" clear opening. Sec 1110B.1.6.8

II. DINING, BANQUET, & BAR FACILITIES

1. Each area where a different type of functional activity occurs shall be accessible to persons with disabilities. Provide wheelchair access to . Sec 1104B.5.3

2. Provide seats/spaces for people using wheelchairs (at least one for each 20 seats, with at least one per functional area) integrated with general seating to avoid having one area specifically highlighted as the area for persons with disabilities. Sec 1104B.5.4

3. Access to disabled seating shall be provided with main aisles not less than 36" in clear width. Sec 1104B.5.4

4. Food service aisles shall be a minimum of 36" in clear width with a preferred width of 42" where passage of stopped wheelchairs by pedestrians is desired. Tray slides shall be mounted no higher than 34" above the floor. If self-service shelves are provided, a reasonable portion must be within 34" of the floor. Sec 1104B.5.5. Fig 11B-16.

5. Tableware, dishware, condiments, and food and beverage display and dispensing devices, when located on tables or counter tops shall be placed 28" to 34" above the adjacent floor. These items, when located on shelves, shall be placed no higher than 54" above the adjacent floor, where not required to reach over an obstruction, and no higher than 46" above the adjacent floor when required to reach over an obstruction. An obstruction which a disabled person is required to reach over shall be no higher than 34" above the adjacent floor with a horizontal reach over the obstruction of no more than 24". Sec 1104B.5.6. Fig 11B-17.

6. Access to food preparation areas shall comply with the provisions for entrance doors and doorways, Section 1004, and aisles, Section 1014.1 & 1014.2 Sec 1104B.5.8

JJ. EDUCATIONAL & LIBRARY FACILITIES

1. Teaching facility cubicles, study carrels, etc., shall have 5%, but always at least one cubicle or carrel in each group made accessible and usable in compliance with Sections 1118B & 1122B. Sec 1106B.3

2. Laboratory rooms shall have at least one work station and at least 5% of all work stations accessible. Sec 1106B.2

3. Library general use areas such as those housing card files, book stacks, preiodicals, reading and reference areas, information desks, circulation counters, etc., shall be made accessible. Sec 1106B.4.1

4. Open book stacks available for customer use may be fo normal height, and shall have main aisles no less than 44" in width and side, range, and end aisles no less than 36" in width. Sec 1106B.4.2

5. Reach heights at card catalogs and magazine displays shall be between 15" and 48" for forward reach and between 9" and 54" for side reach with reach over obstructions in accordance with Figures 11B-5C & D. Sec 1106B.4.4

6. Unless an attendant is available to assist persons with disabilities, all book shelving shall be located not more than 54" above the floor. Sec 1106B.4.3

KK. FACTORIES & WAREHOUSES

1. In factories, major or principal floor areas, office areas, and sanitary facilities serving these areas shall be made accessible. Sec 1107B.1.1 through 1107B.1.3

2. In warehouses, miscellaneous warehousing areas which are located on the floor nearest grade and those areas on other floors that are otherwise provided with access by level entry, ramp or elevator, office areas and sanitary facilities serving these areas shall be made accessible. Sec 1107B.2.1 through 1107B.2.3

LL. STORAGE FACILITIES & AREAS

1. If fixed storage facilities such as cabinets, shelves, closets, or drawers are provided where access is required by Section 1011.11, at least one of each type shall be accessible in terms of clear space, reach ranges, and hardware. Additional storage may be provided outside of required reach ranges. Sec 1125B.1 Fig 11B-5D.

2. A clear floor space at least 30" by 48" that allows either a forward or parallel approach by a person using a wheelchair shall be provided at accessible storage facilities. Sec 1125B.2 Fig 11B-5A.

3. Accessible storage spaces shall be within at least one of the height ranges specified in Sections 1118B.5 & 1118B.6

4. Hardware for accessible storage facilities shall be within at least one of the height ranges specified in Sections 1118B.5 & 1118B.6 and shall be operable with one hand and shall not require tight grasping, pinching, or twisting of the wrist. The force required to activate the hardware shall be no greater than 5 pounds. Touch latches and U-shaped pulls are acceptable. Sec 1125B.4

5. Clothes rods shall be a maximum of 54" from the floor for a side approach. Where the distance from the wheelchair to the clothes rod or shelf exceeds 10", as in closets without accessible doors, the height and depth to the rod or shelf shal comply with Figure 11B-5D. Sec 1125B.3

6. The doorway providing access to storage areas shall be not less than 32" in clear width. Storage areas shall be made accessible as required in Section 1125B. Sec 1105B.3.6.2, 1107B.3.2 & 1110B.2.2

MM. POLICE & FIRE DEPT FACILITIES, & COURTROOMS

1. Office areas, conference rooms, classrooms, dispatch rooms, and similar areas, along with related sanitary facilities, shall be made accessible. Sec 1105B.3.5.1

2. Detention-area visitor rooms shall be made accessible. Sec 1105B.3.5.2

3. At least one detention cell facility with supporting sanitary facilities shall be made accessible. Sec 1105B.3.5.3

4. Courtroom areas, including judge's chambers and bench counsel tables, jury box, witness stand, and public seating areas shall be made accessible. Sec 1105B.3.5.4

NN. PUBLIC UTILITY FACILITIES

NOTE: Facilities located in operational areas which would not have any reasonable availability to or usage by persons who use wheelchairs for mobility are not subject to the wheelchair accessibility requirements of these regulations. Sec 1105B.3.4.2 Excl.

1. Office areas, meeting rooms, and similare areas together with related toilet rooms, in public utility facilitied, shall be made accessible. Sec 1105B.3.4.1

2. Public tour areas, to the extent thatsuch public tours are conducted through or about a facility, or where the public is permited to walk in such areas, shall provide accesibility to those portions of the facility and grounds where this occurs. Sec 1105B.3.4.2

3. Visitor overlook facilities, orientation areas, and similar public use areas, and any sanitary facilities that serve these facilities shall be made accessible. Sec 1105B.3.4.3

4. Where public parking is provided, spaces shall be provided for persons with disabilities as specified in Sections 1129B & 1130B. Sec 1105B.3.4.4

OO. MEDICAL CARE FACILITIES

1. At least one accessible entrance shall be protected from the weather by a canopy or roof overhang. Such entrances shall incorporate a passenger loading zone. Passenger loading zones shall provide an access aisle at least 60" wide and 20' long adjacent and parallel to the vehicle pull-up space. If there are curbs between the access aisle and the vehicle pull-up space, a curb ramp complying with Chapter 11B shall be provided. Vehicle standing spaces and access aisles shall be level with surface slopes not exceeding 1:50 in all directions. A minimum vertical clearance of 114" at accessible passenger loading zones and along vehicle access routes to such areas from site entrances shall be provide. Sec 1109B.2

2. General purpose hospitals, psychiatric facilities, and detoxification facilities shall have at least 10% of patient bedrooms and toilets, and all public use and common use areas, accessible. Sec 1109B.3.2

3. Long-term-care facilities, including skilled nursing facilities, intermediate-care facilities, bed and cre, and nursing homes shall have at least 50% of patient bedrooms and toilet rooms, and all public use and common use areas, accessible. Sec 1109B.3.1

4. Hospitals and rehabilitation facilities that specialize in treating conditions that affect mobility, or units within either that specialize in treating conditions that affect mobility shall have all patient bedrooms and toilets and all public use and common use area accessible. Sec 1109B.3.3

5. Accessible patient bedrooms shall comply with the following: Sec 1109B.4

a. Each bedroom shall have a turning space measuring 60" clear in diameter, or a T-shaped space complying with Figure 11B-12. In rooms with two beds, it is preferable that the space be located between beds. Sec 1109B.4.1

b. Each bedroom shall have a minimum clear floor space of 36" alond each side of the bed, and shall provide an accessible route to each side of the bed. Sec 1109B.4.2

c. Each bedroom shall have an accessible door that complies with Section 1004. Sec 1109B.4.3

6. Patient toilet rooms required to be accessible shall comply with Section 1115B. Sec 1109B.5

7. Diagnostic and treatment areas and, where applicable at least one dressing room, sanitary, facility, etc., for each unit or suite, shall be made accessible. Sec 1109B.6

PP. RECREATIONAL FACILITIES

1. A minimum of two and no fewer that three campsites for each hundred campsites provided, shall be accessible by level path or ramp and shall have travel routes with slopes not exceeding 1:12 to sanitary facilities. Permanent sanitary facilities serving campgrounds shall be accessible to wheelchair occupants. Sec 1132B.2.1

2. Beaches, picnic areas, day-use areas, vista points, and similar areas shall be accessible. Sec 1132B.2.2

3. Boat docks, fishing piers, etc., shall be accessible. Sec 1132B.2.4

4. Highway rest areas and similar facilities shall be accessible as required in Section 1132B.3.1

5. Sanitary facilities shall be made accessible, to the extent that such facilities are provided, in each public-use area that is accessible to wheelchair occupants by automobile, walks, or other paths of travel. Sec 1132B.2.3

RODIN ASSOCIATES, JERRY C. RODIN, ARCHITECT, A.I.A., EXPRESSLY RESERVE THEIR COMMON LAW COPYRIGHT AND OTHER PROPERTY RIGHTS IN THESE PLANS. THESE PLANS ARE NOT TO BE REPRODUCED, CHANGED, OR COPIED IN ANY FORM OR MANNER WHATSOEVER, NOR ARE THEY TO BE ASSIGNED TO A THIRD PARTY WITHOUT FIRST OBTAINING THE WRITTEN PERMISSION AND CONSENT OF, RODIN ASSOCIATES, JERRY C. RODIN, ARCHITECT, A.I.A., SHOULD UNAUTHORIZED RE-USE BY A THIRD PARTY OCCUR, RODIN ASSOCIATES, JERRY C. RODIN, ARCHITECT, A.I.A. SHALL BE HELD HARMLESS.

REVISIONS				REVISIONS			
NO.	DATE	ITEM	BY	NO.	DATE	ITEM	BY
1	11-22-04	LAST DISTRIBUTION CITY LAR&P REVIEW	JCR	5	06-30-09	PARK REVISIONS	JCR
2	4-02-05	REC. & PARKS REVIEW	JCR	6	12-9-09	PARK REVISIONS	JCR
3	5-02-05	BID & PLAN CHECK	JCR				JCR
4	09-20-07	REC. & PARKS REVISION	JCR				JCR

Rodin Associates

Jerry C. Rodin, Architect, A.I.A.

29000 S. WESTERN AVENUE, SUITE 408
RANCHO PALOS VERDES, CA 90275
OFFICE: (310) 832-3135
FAX: (310) 832-0333
E-MAIL: jcrodin@sbcglobal.net

DANIELS FIELD SKATE PARK & SPORTS CENTER DESIGN FOR:
THE CITY OF LOS ANGELES DEPARTMENT OF RECREATION AND PARKS
BOYS & GIRLS CLUB OF SAN PEDRO
MIKE LANSING, EXECUTIVE DIRECTOR
1200 S. CABRILLO AVENUE SAN PEDRO, CA 90731
(310) 833-0807 OFFICE (310) 833-4253 FAX
SITE: 845 W. 12th STREET, SAN PEDRO, CA 90731

DISABLED ACCESS SPECS.

LICENSED ARCHITECT JERRY C. RODIN LIC. NO. C23945 SIGNATURE 12/31/13 EXP. DATE STATE OF CALIFORNIA

ADA-3

06/ 4 / 2012

RA-2002-005

6. Parking lots shall be provided with accessuble parking spaces and with curb cuts leading to all adjacent walks, paths, or trails. Sec 1132B.2.5

7. Trails, paths, and nature walk areas, or portions of these, shall be constructed with gradients which will permit at least partial use by wheelchair occupants. Hard surface paths or walks shall be provided to serve buildings and other functional areas. Sec 1132B.2.6

8. Nature trails and similar educational and informational areas shall be accessible to the blind by the provision of rope guidelines, raised Arabic numerals and symbols for identification, information signs, and related guide and assistance devices. Sec 1132B.2.7

RR. PUBLICLY-FUNDED DWELLING UNITS

NOTE: Multi-family dwelling unit does not include hotels and motels. Sec 1111B.5.1.2

1. Buildings and complexes containing publicly-funding dwelling units shall be accessible as required by Chapter 11A, Accessibity for Privately-Funded Housing, except that scoping requirements for Covered Multifamily Dwellings additionally include one or more publicly-funded dwelling units, and is required to comply with Division IV- Accessibility for Existing Buildings beginning with Section 1134B. Sec 1111B.5.1

SS. ELECTRICAL

1. The center of junction boxes for receptacle outlets shall be installed at an accessible location meeing the clearances and reach range requirements of Section 1118B.E Sec 1117B.6.3 & 210-7 (g.1).

2. The center of the grip of the operating handle of controls or switches intended to be used by the occupand of the room or area to control lighting and receptacle outlets, appliances, or cooling, heating, and ventilating equipment shall meet the requirements of Part 2, California Building Code (CBC), Section 1118B, Space Allowance and Reach Ranges, for persons with disabilities. Sec 380-8(c.1).

3. The center of fire alarm initiating devices (boxes) shall be located 48" above the level of the floor, working platform, ground surface, or sidewalk. Sec 760-9.

4. The installation of fire alarm equipment and systems in any occupancy within the scope of these regulations shall be in accordance with the provisions of the California Electrical Code. Sec 720.

TT. NOTIFICATION APPLIANCES FOR THE HEARING IMPAIRED

1. If emergency warning systems are required they shall activate a means of warning the hearing impaired. Sec 1114B.2.5 & 7204(a).

2. Approved notification appliances for the hearing impaired shall be installed in accordance with the provisions of NFPA 72G in the following areas:
Ch 35, Sec 2-4.9.1

a. Restrooms
b. Corridors
c. Music practice rooms.
d. Band rooms.
e. Gymnasiums.
f. Multipurpose rooms,
g. Occupational shops.
h. Occupied rooms where ambient noise impairs hearing of the fire alarm.
j. Meeting rooms.
K. Any other area for common use.

3. Strobe signaling deviced required for the hearing impaired shall be state fire marshall approved and listed. Sec 7203(c).

4. Notification appliances for the hearing impaired shall also be provided with the following: NFPA 72G, Sec 6004(1)

a. Audible signals intended for operation in the public mode should have a sound level of not less than 75dBA at 10' or more than 110dBA at the minimum hearing distance from the audible appliance. Ch 35, Sec 3-1.1.1

b. Audible signals intended for operation in the private mode should have a sound level of not less than 45 dBA at 10' or more than 110dBA at the minimum hearing distance from the audible appliance. Ch 35, Sec 3-1.1.2

c. A specification value not to exceed 3 flashed per second and not slower than 1 flash per second. CH 35, Sec 3-2.3.1

d. A clear or nominal white colored light source. Ch 35, Sec 3-2.3.3.

e. Placement as low as possible, but no lower than a minimum of 80" (2 meters) above the floor and a minimum of 6" (0.15 meter) below the ceiling. Ch 35, Sec 5-2.1.1.

f. Notification appliances for occupancies required to comply with the Americans with Disabilities Act (ADA) shall comply with the following: Ch 35, Sec 3-2.4.1.4. & Sec 5-2.1.6

1. A pulsing light source of not less than 75 candela shall be provided.

2. No place in any room or space required to have a visual signal appliance shall be more than 50' (15 meters) from the signal (in the horizontal plane). In large rooms and spaces exceeding 100' (30 meters) across, without obstructions 6' (2 meters) above the finished floor, such as auditoriums, devices may be placed around the perimeter, spaced a maximum 100' (30 meters) apart, in lieu of suspending appliances from the ceiling.

3. No place in common corridors or hallways in which visual alarm signaling appliances are required shall be more than 50' (15 meters) from the signal.

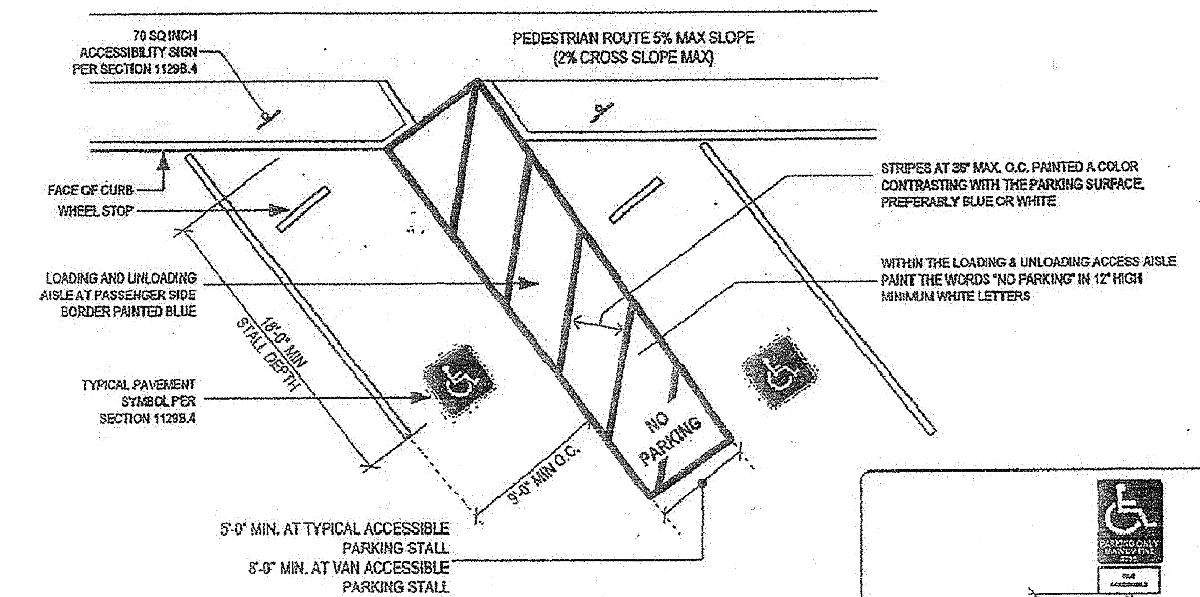

FIGURE 11B-18C – DIAGONAL PARKING STALLS

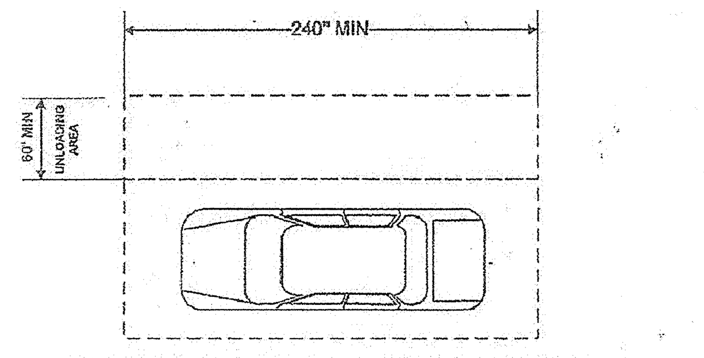

FIGURE 11B – 24 ACCESS AISLE AT PASSENGER LOADING ZONES

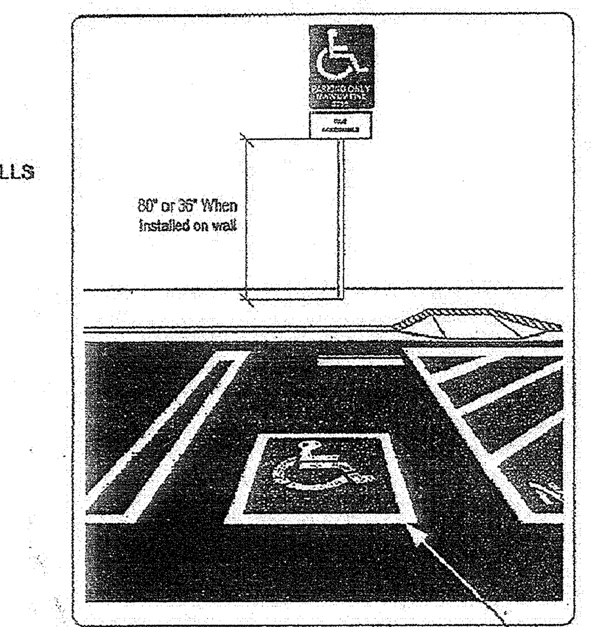

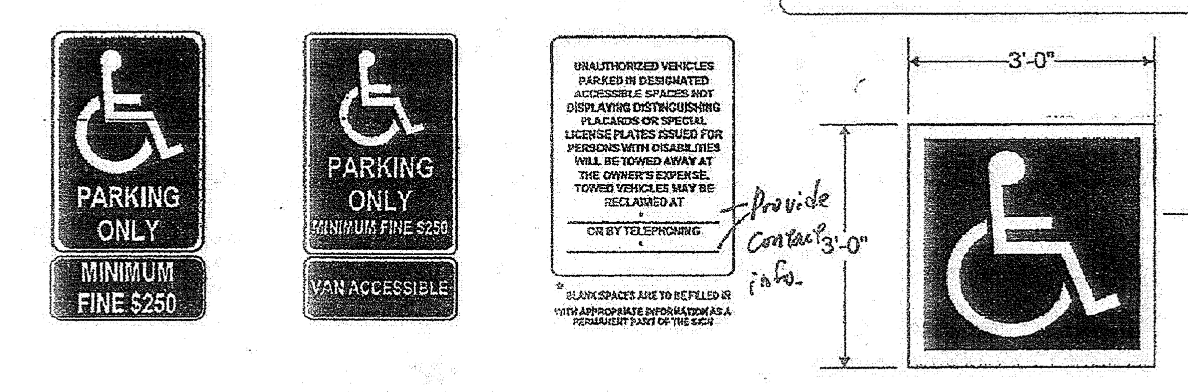

SECTION 1129B.4

As a covered entity under Title II of the Americans with Disabilities Act, the City of Los Angeles does not discriminate on the basis of disability and, upon request, will provide reasonable accommodation to ensure equal access to its programs, services and activities. For efficient handling of information internally and in the internet, conversion to this new format of code related and administrative information bulletins including MGD and RGA that were previously issued will also allow flexibility and timely distribution of information to the public.

Page 4 of 4

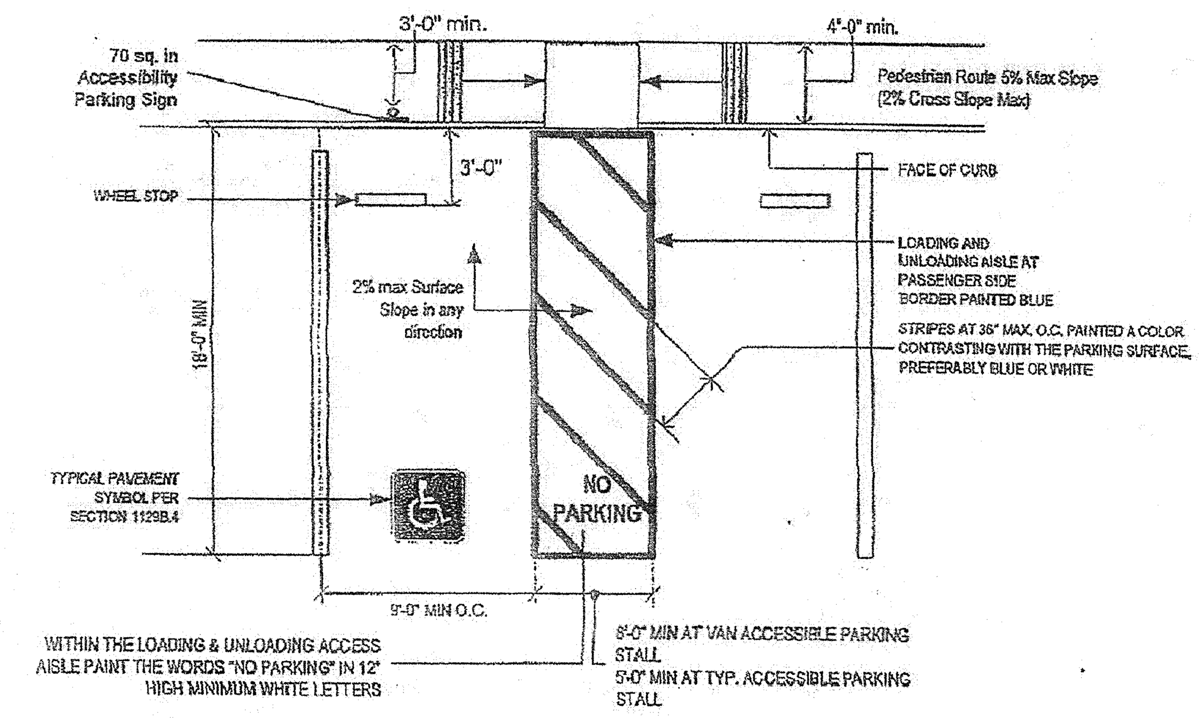

FIGURE 11B-18B – SINGLE PARKING STALL

NOTE:
WHEN ONLY ONE ACCESSIBLE PARKING IS PROVIDED, IT MUST BE VAN ACCESSIBLE

Curb Ramps need to comply with provisions of Sec. 1127B.5 including requirements for detectable warnings.

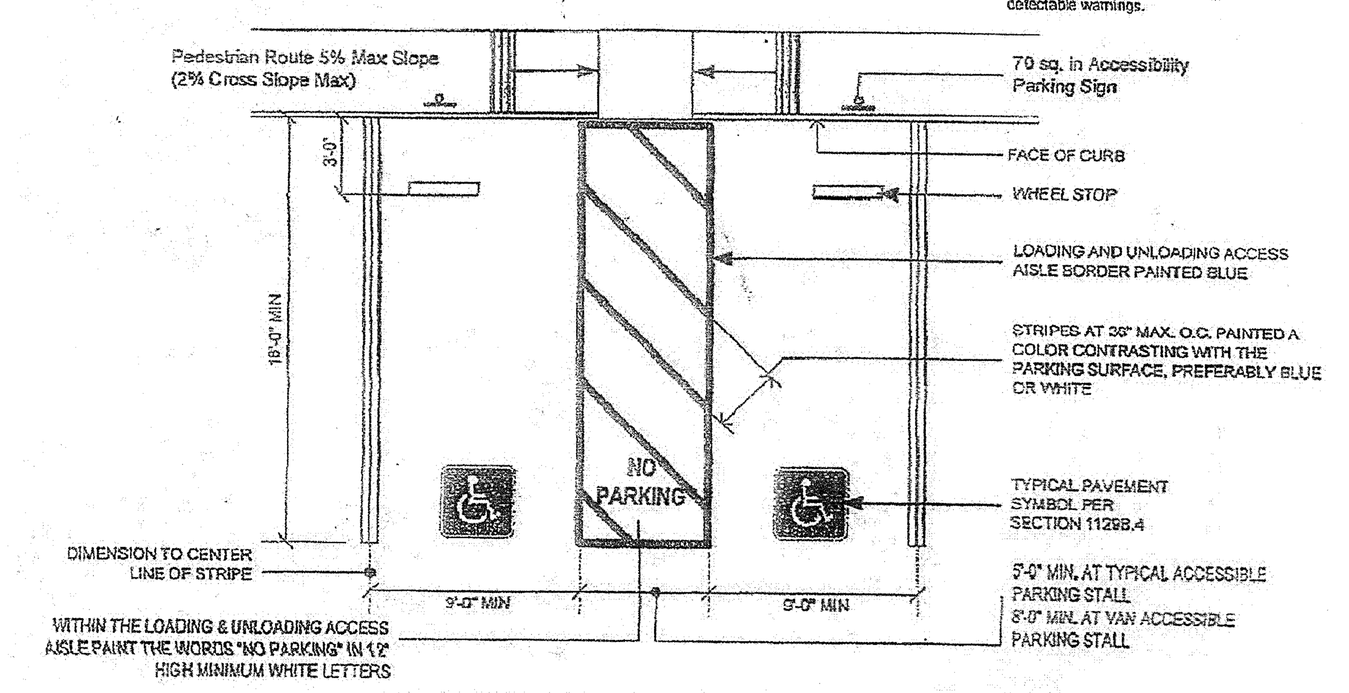

FIGURE 11B-18A – DOUBLE PARKING STALLS

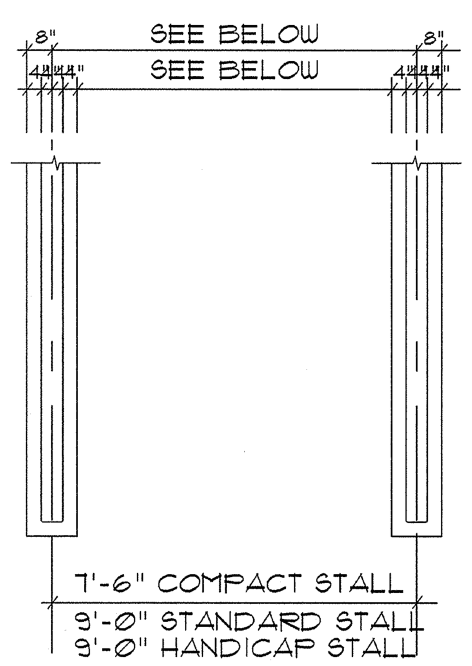

3 ADA-4 STRIPING DETAIL

NOT TO SCALE

NOTE: DOUBLE STRIPING OF STALLS SHALL BE PER FIGURE 7 OF THE CITY OF LOS ANGELES BUILDING STANDARDS

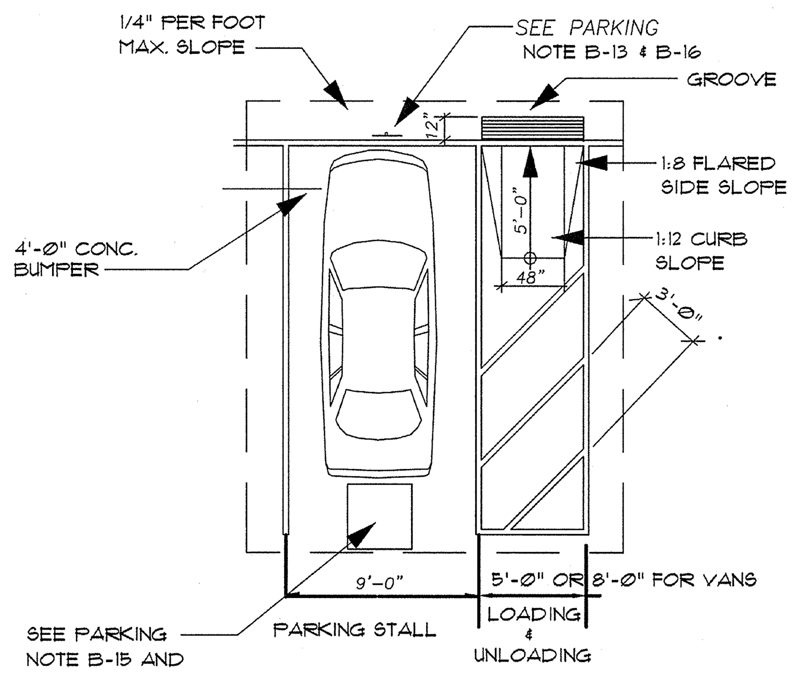

1 ADA-4 TYPICAL H.C. PARKING STALL AND STRIPING

NOT TO SCALE

CITY OF LOS ANGELES
DEPARTMENT OF BUILDING AND SAFETY
DISABLED ACCESS SECTION

This set of plans and specifications has been reviewed and is approved for compliance with state and local laws and ordinances related to accessibility to public accommodations and housing.

The stamping of this set of plans and specifications shall not be held to permit or to be an approval of the violation of any provisions of federal, state and local laws and ordinances related to accessibility to public accommodations and housing.

By:______________ Total of______ Sheet

Date:______________

THESE NOTES REPRESENT DIMENSIONS AND CLEARANCES REQUIRED FOR COMPLIANCE WITH THE AMERICAN WITH DISABILITIES ACT. FIELD INVESTIGATION HAS REVEALED THAT THIS PROJECT IS IN SUBSTANTIAL COMPLIANCE WITH THESE REQUIREMENTS. ACTUAL WORK TO BE PERFORMED IS INDICATED ON THE ACCOMPANYING DOCUMENTS AND THIS PAGE IS FOR REFERENCE ONLY. CONTRACTOR SHALL NOTIFY THE ARCHITECT PRIOR TO THE COMMENCEMENT OF WORK IF ANY DISCREPANCIES EXIST WHICH WILL PREVENT COMPLIANCE WITH THE INTENT OF THE AMERICAN WITH DISABILITIES ACT.

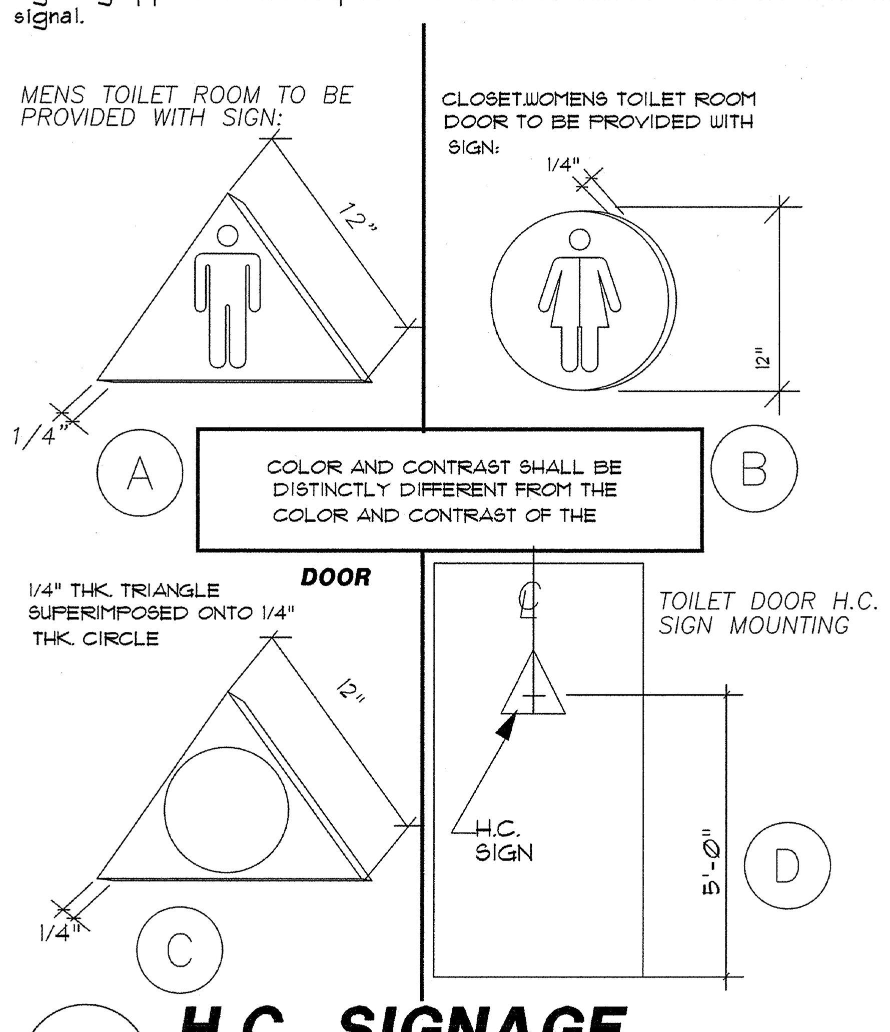

4 ADA-4 H.C. SIGNAGE

NOT TO SCALE

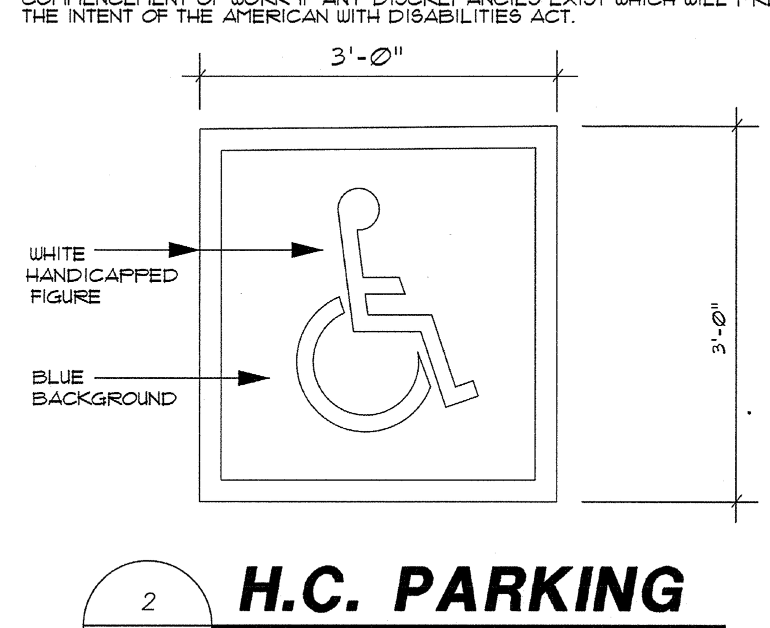

2 ADA-4 H.C. PARKING SYMBOL

NOT TO SCALE

Sign Installed At Each Space

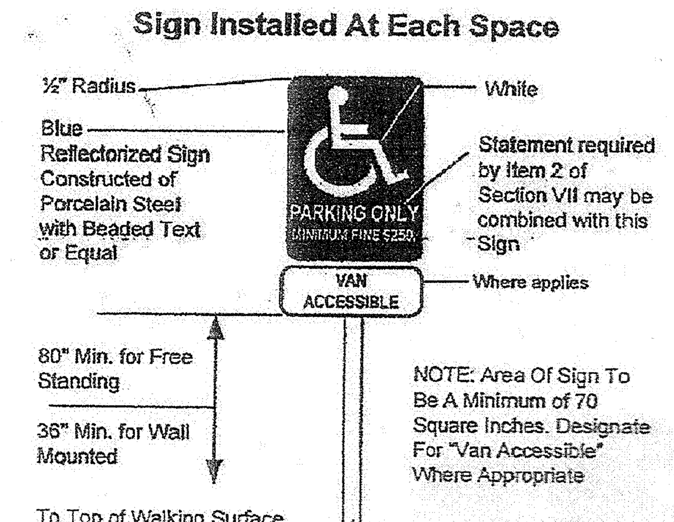

RT SEP 20 2012

REVISIONS			
NO.	DATE	ITEM	BY
1	11-22-04	LAST DISTRIBUTION CITY LAR&P REVIEW	JCR
2	4-02-05	REC. & PARKS REVIEW	JCR
3	5-02-05	BID & PLAN CHECK	JCR
4	09-20-07	REC. & PARKS REVISION	JCR

REVISIONS			
NO.	DATE	ITEM	BY
5	06-30-09	PARK REVISIONS	JCR
6	12-9-09	PARK REVISIONS	JCR
			JCR
			JCR

Rodin Associates

Jerry C. Rodin, Architect, A.I.A.

29000 S. WESTERN AVENUE, SUITE 408
RANCHO PALOS VERDES, CA 90275
OFFICE: (310) 832-3135
FAX: (310) 832-0333
E-MAIL: jcrodin@sbcglobal.net

DANIELS FIELD SKATE PARK & SPORTS CENTER DESIGN FOR:
THE CITY OF LOS ANGELES DEPARTMENT OF RECREATION AND PARKS
BOYS & GIRLS CLUB OF SAN PEDRO
MIKE LANSING, EXECUTIVE DIRECTOR
1200 S. CABRILLO AVENUE SAN PEDRO, CA 90731
(310) 833-0807 OFFICE (310) 833-4253 FAX
SITE: 845 W. 12th STREET, SAN PEDRO, CA 90731

DISABLED ACCESS NOTES & DTEAILS

LICENSED ARCHITECT · JERRY C. RODIN · LIC. NO. C23945 · SIGNATURE · 12/31/13 EXP. DATE · STATE OF CALIFORNIA

ADA-4

06/ 4 / 2012

RA-2002-005

RODIN ASSOCIATES, JERRY C. RODIN, ARCHITECT, A.I.A. EXPRESSLY RESERVE THEIR COMMON LAW COPYRIGHT AND OTHER PROPERTY RIGHTS IN THESE PLANS. THESE PLANS ARE NOT TO BE REPRODUCED, CHANGED, OR COPIED IN ANY FORM OR MANNER WHATSOEVER, NOR ARE THEY TO BE ASSIGNED TO A THIRD PARTY WITHOUT FIRST OBTAINING THE WRITTEN PERMISSION AND CONSENT OF RODIN ASSOCIATES, JERRY C. RODIN, ARCHITECT, A.I.A. SHOULD UNAUTHORIZED RE-USE BY A THIRD PARTY OCCUR, RODIN ASSOCIATES, JERRY C. RODIN, ARCHITECT, A.I.A. SHALL BE HELD HARMLESS.

RODIN ASSOCIATES, JERRY C. RODIN, ARCHITECT, A.I.A. EXPRESSLY RESERVE THEIR COMMON LAW COPYRIGHT AND OTHER PROPERTY RIGHTS IN THESE PLANS. THESE PLANS ARE NOT TO BE REPRODUCED, CHANGED, OR COPIED IN ANY FORM OR MANNER WHATSOEVER NOR ARE THEY TO BE ASSIGNED TO A THIRD PARTY WITHOUT FIRST OBTAINING THE WRITTEN PERMISSION AND CONSENT OF RODIN ASSOCIATES, JERRY C. RODIN, ARCHITECT, A.I.A. SHOULD UNAUTHORIZED REUSE BY A THIRD PARTY OCCUR, JERRY C. RODIN ASSOCIATES, JERRY C. RODIN, ARCHITECT, A.I.A. SHALL BE HELD HARMLESS.

RA-2002-005

ADA-5

06 / 4 / 2012

RECEIVED
SEP 23 2013
CITY OF CALIFORNIA
JERRY C. RODIN LIC NO. C-22011
EXP. DATE
12 / 31 / 13
SIGNATURE

DISABLED ACCESS DETAILS

DANIELS FIELD SKATE PARK & SPORTS CENTER DESIGN FOR:
THE CITY OF LOS ANGELES DEPARTMENT OF RECREATION AND PARKS
BOYS & GIRLS CLUB OF SAN PEDRO
MIKE KAGANSKY, EXECUTIVE DIRECTOR — SAN PEDRO, CA 90731
(310) 833-0587 OFFICE (310) 833-4259 FAX
845 W. 12th STREET, SAN PEDRO, CA 90731

SITE:

Dlz spooldo

Scale: 1/4"=1'-0"

This set of plans and specifications has been prepared and is the property of Rodin Associates and may not be used for construction with any person or public agency without the written consent of Rodin Associates. Visual contact with these plans and specifications shall constitute prima facie evidence of the acceptance of these restrictions. Any unauthorized use of these plans and specifications will be the responsibility of the user and will subject him to legal liability for the consequences of such use. The reproduction of these plans and specifications for any purpose whatsoever without the express written permission of Rodin Associates is prohibited. Any violation of this restriction will subject violators to legal prosecution.

Rodin Associates

29000 S. WESTERN AVENUE, SUITE 408
RANCHO PALOS VERDES, CA 90275
OFFICE: (310) 832-3135
FAX: (310) 832-0333
E-MAIL: jcrodin@sbcglobal.net

Jerry C. Rodin, Architect, A.I.A.

REVISIONS				REVISIONS			
NO	DATE	ITEM	BY	NO	DATE	ITEM	BY
1	12-12-04	LAAFD DISTRIBUTION	NCR	4	06-30-05	PARK REVISIONS	NCR
2	02-20-05	PER LA PARKS REVIEW	NCR	5	08-15-05	PARK REVISIONS	NCR
3	05-20-05	BID / PLAN CHECK	NCR				

1	DISABLED ACCESS DETAILS
2	ELEVATOR CONTROL PANEL
3	WALKING PERPENDICULAR TO WALL
4	PARALLEL TO WALL
5	OBSTRUCTIONS
6	OVERHEAD OBSTRUCTION
7	CURB DETAILS C and D
8	CURB DETAILS G and H
9	CURB DETAILS A and B
10	CURB DETAILS E and F
11	CURB DETAILS
12	CURB DETAILS
13	CURB DETAILS
14	CURB RAMP
15	CURB RAMP

DESTINATIONS CLEARANCE

ELEVATOR

FIGURE 118-2A

FIGURE 118-2B

FIGURE 118-2C

FIGURE 118-2D

FIGURE 118-2E

FIGURE 118-2F

FIGURE 118-2G

FIGURE 118-2H

FIGURE 118-2I

FIGURE 118-2J

FIGURE 118-2K

FIGURE 118-2L

FIGURE 118-2M

FIGURE 118-2N

FIGURE 118-2O

FIGURE 118-2P

FIGURE 118-2Q

FIGURE 118-2R

FIGURE 118-2S

FIGURE 118-2T

FIGURE 118-2U

FIGURE 118-2V

FIGURE 118-2W

FIGURE 118-2X

FIGURE 118-2Y

FIGURE 118-2Z

FIGURE 118-2AA

FIGURE 118-2AB

FIGURE 118-2AC

FIGURE 118-2AD

FIGURE 118-2AE

FIGURE 118-2AF

FIGURE 118-2AG

FIGURE 118-2AH

FIGURE 118-2AI

FIGURE 118-2AJ

FIGURE 118-2AK

FIGURE 118-2AL

FIGURE 118-2AM

FIGURE 118-2AN

FIGURE 118-2AO

FIGURE 118-2AP

FIGURE 118-2AQ

FIGURE 118-2AR

FIGURE 118-2AS

FIGURE 118-2AT

FIGURE 118-2AU

FIGURE 118-2AV

FIGURE 118-2AW

FIGURE 118-2AX

FIGURE 118-2AY

FIGURE 118-2AZ

FIGURE 118-2BA

FIGURE 118-2BB

FIGURE 118-2BC

FIGURE 118-2BD

FIGURE 118-2BE

FIGURE 118-2BF

FIGURE 118-2BG

FIGURE 118-2BH

FIGURE 118-2BI

FIGURE 118-2BJ

FIGURE 118-2BK

FIGURE 118-2BL

FIGURE 118-2BM

FIGURE 118-2BN

FIGURE 118-2BO

FIGURE 118-2BP

FIGURE 118-2BQ

FIGURE 118-2BR

FIGURE 118-2BS

FIGURE 118-2BT

FIGURE 118-2BU

FIGURE 118-2BV

FIGURE 118-2BW

FIGURE 118-2BX

FIGURE 118-2BY

FIGURE 118-2BZ

FIGURE 118-2CA

FIGURE 118-2CB

FIGURE 118-2CC

FIGURE 118-2CD

FIGURE 118-2CE

FIGURE 118-2CF

FIGURE 118-2CG

FIGURE 118-2CH

FIGURE 118-2CI

FIGURE 118-2CJ

FIGURE 118-2CK

FIGURE 118-2CL

FIGURE 118-2CM

FIGURE 118-2CN

FIGURE 118-2CO

FIGURE 118-2CP

FIGURE 118-2CQ

FIGURE 118-2CR

FIGURE 118-2CS

FIGURE 118-2CT

FIGURE 118-2CU

FIGURE 118-2CV

FIGURE 118-2CW

FIGURE 118-2CX

FIGURE 118-2CY

FIGURE 118-2CZ

FIGURE 118-2DA

FIGURE 118-2DB

FIGURE 118-2DC

FIGURE 118-2DD

FIGURE 118-2DE

FIGURE 118-2DF

FIGURE 118-2DG

FIGURE 118-2DH

FIGURE 118-2DI

FIGURE 118-2DJ

FIGURE 118-2DK

FIGURE 118-2DL

FIGURE 118-2DM

FIGURE 118-2DN

FIGURE 118-2DO

FIGURE 118-2DP

FIGURE 118-2DQ

FIGURE 118-2DR

FIGURE 118-2DS

FIGURE 118-2DT

FIGURE 118-2DU

FIGURE 118-2DV

FIGURE 118-2DW

FIGURE 118-2DX

FIGURE 118-2DY

FIGURE 118-2DZ

FIGURE 118-2EA

FIGURE 118-2EB

FIGURE 118-2EC

FIGURE 118-2ED

FIGURE 118-2EE

FIGURE 118-2EF

FIGURE 118-2EG

FIGURE 118-2EH

FIGURE 118-2EI

FIGURE 118-2EJ

FIGURE 118-2EK

FIGURE 118-2EL

FIGURE 118-2EM

FIGURE 118-2EN

FIGURE 118-2EO

FIGURE 118-2EP

FIGURE 118-2EQ

FIGURE 118-2ER

FIGURE 118-2ES

FIGURE 118-2ET

FIGURE 118-2EU

FIGURE 118-2EV

FIGURE 118-2EW

FIGURE 118-2EX

FIGURE 118-2EY

FIGURE 118-2EZ

FIGURE 118-2FA

FIGURE 118-2FB

FIGURE 118-2FC

FIGURE 118-2FD

FIGURE 118-2FE

FIGURE 118-2FF

FIGURE 118-2FG

FIGURE 118-2FH

FIGURE 118-2FI

FIGURE 118-2FJ

FIGURE 118-2FK

FIGURE 118-2FL

FIGURE 118-2FM

FIGURE 118-2FN

FIGURE 118-2FO

FIGURE 118-2FP

FIGURE 118-2FQ

FIGURE 118-2FR

FIGURE 118-2FS

FIGURE 118-2FT

FIGURE 118-2FU

FIGURE 118-2FV

FIGURE 118-2FW

FIGURE 118-2FX

FIGURE 118-2FY

FIGURE 118-2FZ

FIGURE 118-2GA

FIGURE 118-2GB

FIGURE 118-2GC

FIGURE 118-2GD

FIGURE 118-2GE

FIGURE 118-2GF

FIGURE 118-2GG

FIGURE 118-2GH

FIGURE 118-2GI

FIGURE 118-2GJ

FIGURE 118-2GK

FIGURE 118-2GL

FIGURE 118-2GM

FIGURE 118-2GN

FIGURE 118-2GO

FIGURE 118-2GP

FIGURE 118-2GQ

FIGURE 118-2GR

FIGURE 118-2GS

FIGURE 118-2GT

FIGURE 118-2GU

FIGURE 118-2GV

FIGURE 118-2GW

FIGURE 118-2GX

FIGURE 118-2GY

FIGURE 118-2GZ

FIGURE 118-2HA

FIGURE 118-2HB

FIGURE 118-2HC

FIGURE 118-2HD

FIGURE 118-2HE

FIGURE 118-2HF

FIGURE 118-2HG

FIGURE 118-2HH

FIGURE 118-2HI

FIGURE 118-2HJ

FIGURE 118-2HK

FIGURE 118-2HL

FIGURE 118-2HM

FIGURE 118-2HN

FIGURE 118-2HO

FIGURE 118-2HP

FIGURE 118-2HQ

FIGURE 118-2HR

FIGURE 118-2HS

FIGURE 118-2HT

FIGURE 118-2HU

FIGURE 118-2HV

FIGURE 118-2HW

FIGURE 118-2HX

FIGURE 118-2HY

FIGURE 118-2HZ

FIGURE 118-2IA

FIGURE 118-2IB

FIGURE 118-2IC

FIGURE 118-2ID

FIGURE 118-2IE

FIGURE 118-2IF

FIGURE 118-2IG

FIGURE 118-2IH

FIGURE 118-2II

FIGURE 118-2IJ

FIGURE 118-2IK

FIGURE 118-2IL

FIGURE 118-2IM

FIGURE 118-2IN

FIGURE 118-2IO

FIGURE 118-2IP

FIGURE 118-2IQ

FIGURE 118-2IR

FIGURE 118-2IS

FIGURE 118-2IT

FIGURE 118-2IU

FIGURE 118-2IV

FIGURE 118-2IW

FIGURE 118-2IX

FIGURE 118-2IY

FIGURE 118-2IZ

FIGURE 118-2JA

FIGURE 118-2JB

FIGURE 118-2JC

FIGURE 118-2JD

FIGURE 118-2JE

FIGURE 118-2JF

FIGURE 118-2JG

FIGURE 118-2JH

FIGURE 118-2JI

FIGURE 118-2JJ

FIGURE 118-2JK

FIGURE 118-2JL

FIGURE 118-2JM

FIGURE 118-2JN

FIGURE 118-2JO

FIGURE 118-2JP

FIGURE 118-2JQ

FIGURE 118-2JR

FIGURE 118-2JS

FIGURE 118-2JT

FIGURE 118-2JU

FIGURE 118-2JV

FIGURE 118-2JW

FIGURE 118-2JX

FIGURE 118-2JY

FIGURE 118-2JZ

FIGURE 118-2KA

FIGURE 118-2KB

FIGURE 118-2KC

FIGURE 118-2KD

FIGURE 118-2KE

FIGURE 118-2KF

FIGURE 118-2KG

FIGURE 118-2KH

FIGURE 118-2KI

FIGURE 118-2KJ

FIGURE 118-2KK

FIGURE 118-2KL

FIGURE 118-2KM

FIGURE 118-2KN

FIGURE 118-2KO

FIGURE 118-2KP

FIGURE 118-2KQ

FIGURE 118-2KR

FIGURE 118-2KS

FIGURE 118-2KT

FIGURE 118-2KU

FIGURE 118-2KV

FIGURE 118-2KW

FIGURE 118-2KX

FIGURE 118-2KY

FIGURE 118-2KZ

FIGURE 118-2LA

FIGURE 118-2LB

FIGURE 118-2LC

FIGURE 118-2LD

FIGURE 118-2LE

FIGURE 118-2LF

FIGURE 118-2LG

FIGURE 118-2LH

FIGURE 118-2LI

FIGURE 118-2LJ

FIGURE 118-2LK

FIGURE 118-2LL

FIGURE 118-2LM

FIGURE 118-2LN

FIGURE 118-2LO

FIGURE 118-2LP

FIGURE 118-2LQ

FIGURE 118-2LR

FIGURE 118-2LS

FIGURE 118-2LT

FIGURE 118-2LU

FIGURE 118-2LV

FIGURE 118-2LW

FIGURE 118-2LX

FIGURE 118-2LY

FIGURE 118-2LZ

FIGURE 118-2MA

FIGURE 118-2MB

FIGURE 118-2MC

FIGURE 118-2MD

FIGURE 118-2ME

FIGURE 118-2MF

FIGURE 118-2MG

FIGURE 118-2MH

FIGURE 118-2MI

FIGURE 118-2MJ

FIGURE 118-2MK

FIGURE 118-2ML

FIGURE 118-2MM

FIGURE 118-2MN

FIGURE 118-2MO

FIGURE 118-2MP

FIGURE 118-2MQ

FIGURE 118-2MR

FIGURE 118-2MS

FIGURE 118-2MT

FIGURE 118-2MU

FIGURE 118-2MV

FIGURE 118-2MW

FIGURE 118-2MX

FIGURE 118-2MY

FIGURE 118-2MZ

FIGURE 118-2NA

FIGURE 118-2NB

FIGURE 118-2NC

FIGURE 118-2ND

FIGURE 118-2NE

FIGURE 118-2NF

FIGURE 118-2NG

FIGURE 118-2NH

FIGURE 118-2NI

FIGURE 118-2NJ

FIGURE 118-2NK

FIGURE 118-2NL

FIGURE 118-2NM

FIGURE 118-2NN

FIGURE 118-2NO

FIGURE 118-2NP

FIGURE 118-2NQ

FIGURE 118-2NR

FIGURE 118-2NS

FIGURE 118-2NT

FIGURE 118-2NU

FIGURE 118-2NV

FIGURE 118-2NW

FIGURE 118-2NX

FIGURE 118-2NY

FIGURE 118-2NZ

FIGURE 118-2OA

FIGURE 118-2OB

FIGURE 118-2OC

FIGURE 118-2OD

FIGURE 118-2OE

FIGURE 118-2OF

FIGURE 118-2OG

FIGURE 118-2OH

FIGURE 118-2OI

FIGURE 118-2OJ

FIGURE 118-2OK

FIGURE 118-2OL

FIGURE 118-2OM

FIGURE 118-2ON

FIGURE 118-2OO

FIGURE 118-2OP

FIGURE 118-2OQ

FIGURE 118-2OR

FIGURE 118-2OS

FIGURE 118-2OT

FIGURE 118-2OU

FIGURE 118-2OV

FIGURE 118-2OW

FIGURE 118-2OX

FIGURE 118-2OY

FIGURE 118-2OZ

FIGURE 118-2PA

FIGURE 118-2PB

FIGURE 118-2PC

FIGURE 118-2PD

FIGURE 118-2PE

FIGURE 118-2PF

FIGURE 118-2PG

FIGURE 118-2PH

FIGURE 118-2PI

FIGURE 118-2PJ

FIGURE 118-2PK

FIGURE 118-2PL

FIGURE 118-2PM

FIGURE 118-2PN

FIGURE 118-2PO

FIGURE 118-2PP

FIGURE 118-2PQ

FIGURE 118-2PR

FIGURE 118-2PS

FIGURE 118-2PT

FIGURE 118-2PU

FIGURE 118-2PV

FIGURE 118-2PW

FIGURE 118-2PX

FIGURE 118-2PY

FIGURE 118-2PZ

FIGURE 118-2QA

FIGURE 118-2QB

FIGURE 118-2QC

FIGURE 118-2QD

FIGURE 118-2QE

FIGURE 118-2QF

FIGURE 118-2QG

FIGURE 118-2QH

FIGURE 118-2QI

FIGURE 118-2QJ

FIGURE 118-2QK

FIGURE 118-2QL

FIGURE 118-2QM

FIGURE 118-2QN

FIGURE 118-2QO

FIGURE 118-2QP

FIGURE 118-2QQ

FIGURE 118-2QR

FIGURE 118-2QS

FIGURE 118-2QT

FIGURE 118-2QU

FIGURE 118-2QV

FIGURE 118-2QW

FIGURE 118-2QX

FIGURE 118-2QY

FIGURE 118-2QZ

FIGURE 118-2RA

FIGURE 118-2RB

FIGURE 118-2RC

FIGURE 118-2RD

FIGURE 118-2RE

FIGURE 118-2RF

FIGURE 118-2RG

FIGURE 118-2RH

FIGURE 118-2RI

FIGURE 118-2RJ

FIGURE 118-2RK

FIGURE 118-2RL

FIGURE 118-2RM

FIGURE 118-2RN

FIGURE 118-2RO

FIGURE 118-2RP

FIGURE 118-2RQ

FIGURE 118-2RR

FIGURE 118-2RS

FIGURE 118-2RT

FIGURE 118-2RU

FIGURE 118-2RV

FIGURE 118-2RW

FIGURE 118-2RX

FIGURE 118-2RY

FIGURE 118-2RZ

FIGURE 118-2SA

FIGURE 118-2SB

FIGURE 118-2SC

FIGURE 118-2SD

FIGURE 118-2SE

FIGURE 118-2SF

FIGURE 118-2SG

FIGURE 118-2SH

FIGURE 118-2SI

FIGURE 118-2SJ

FIGURE 118-2SK

FIGURE 118-2SL

FIGURE 118-2SM

FIGURE 118-2SN

FIGURE 118-2SO

FIGURE 118-2SP

FIGURE 118-2SQ

FIGURE 118-2SR

FIGURE 118-2SS

FIGURE 118-2ST

FIGURE 118-2SU

FIGURE 118-2SV

FIGURE 118-2SW

FIGURE 118-2SX

FIGURE 118-2SY

FIGURE 118-2SZ

FIGURE 118-2TA

FIGURE 118-2TB

FIGURE 118-2TC

FIGURE 118-2TD

FIGURE 118-2TE

FIGURE 118-2TF

FIGURE 118-2TG

FIGURE 118-2TH

FIGURE 118-2TI

FIGURE 118-2TJ

FIGURE 118-2TK

FIGURE 118-2TL

FIGURE 118-2TM

FIGURE 118-2TN

FIGURE 118-2TO

FIGURE 118-2TP

FIGURE 118-2TQ

FIGURE 118-2TR

FIGURE 118-2TS

FIGURE 118-2TT

FIGURE 118-2TU

FIGURE 118-2TV

FIGURE 118-2TW

FIGURE 118-2TX

FIGURE 118-2TY

FIGURE 118-2TZ

FIGURE 118-2UA

FIGURE 118-2UB

FIGURE 118-2UC

FIGURE 118-2UD

FIGURE 118-2UE

FIGURE 118-2UF

FIGURE 118-2UG

FIGURE 118-2UH

FIGURE 118-2UI

FIGURE 118-2UJ

FIGURE 118-2UK

FIGURE 118-2UL

FIGURE 118-2UM

FIGURE 118-2UN

FIGURE 118-2UO

FIGURE 118-2UP

FIGURE 118-2UQ

FIGURE 118-2UR

FIGURE 118-2US

FIGURE 118-2UT

FIGURE 118-2UU

FIGURE 118-2UV

FIGURE 118-2UW

FIGURE 118-2UX

FIGURE 118-2UY

FIGURE 118-2UZ

FIGURE 118-2VA

FIGURE 118-2VB

FIGURE 118-2VC

FIGURE 118-2VD

FIGURE 118-2VE

FIGURE 118-2VF

FIGURE 118-2VG

FIGURE 118-2VH

FIGURE 118-2VI

FIGURE 118-2VJ

FIGURE 118-2VK

FIGURE 118-2VL

FIGURE 118-2VM

FIGURE 118-2VN

FIGURE 118-2VO

FIGURE 118-2VP

FIGURE 118-2VQ

FIGURE 118-2VR

FIGURE 118-2VS

FIGURE 118-2VT

FIGURE 118-2VU

FIGURE 118-2VV

FIGURE 118-2VW

FIGURE 118-2VX

FIGURE 118-2VY

FIGURE 118-2VZ

FIGURE 118-2WA

FIGURE 118-2WB

FIGURE 118-2WC

FIGURE 118-2WD

FIGURE 118-2WE

FIGURE 118-2WF

FIGURE 118-2WG

FIGURE 118-2WH

FIGURE 118-2WI

FIGURE 118-2WJ

FIGURE 118-2WK

FIGURE 118-2WL

FIGURE 118-2WM

FIGURE 118-2WN

FIGURE 118-2WO

FIGURE 118-2WP

FIGURE 118-2WQ

FIGURE 118-2WR

FIGURE 118-2WS

FIGURE 118-2WT

FIGURE 118-2WU

FIGURE 118-2WV

FIGURE 118-2WW

FIGURE 118-2WX

FIGURE 118-2WY

FIGURE 118-2WZ

FIGURE 118-2XA

FIGURE 118-2XB

FIGURE 118-2XC

FIGURE 118-2XD

FIGURE 118-2XE

FIGURE 118-2XF

FIGURE 118-2XG

FIGURE 118-2XH

FIGURE 118-2XI

FIGURE 118-2XJ

FIGURE 118-2XK

FIGURE 118-2XL

FIGURE 118-2XM

FIGURE 118-2XN

FIGURE 118-2XO

FIGURE 118-2XP

FIGURE 118-2XQ

FIGURE 118-2XR

FIGURE 118-2XS

FIGURE 118-2XT

FIGURE 118-2XU

FIGURE 118-2XV

FIGURE 118-2XW

FIGURE 118-2XX

FIGURE 118-2XY

FIGURE 118-2XZ

FIGURE 118-2YA

FIGURE 118-2YB

FIGURE 118-2YC

FIGURE 118-2YD

FIGURE 118-2YE

FIGURE 118-2YF

FIGURE 118-2YG

FIGURE 118-2YH

FIGURE 118-2YI

FIGURE 118-2YJ

FIGURE 118-2YK

FIGURE 118-2YL

FIGURE 118-2YM

FIGURE 118-2YN

FIGURE 118-2YO

FIGURE 118-2YP

FIGURE 118-2YQ

FIGURE 118-2YR

FIGURE 118-2YS

FIGURE 118-2YT

FIGURE 118-2YU

FIGURE 118-2YV

FIGURE 118-2YW

FIGURE 118-2YX

FIGURE 118-2YY

FIGURE 118-2YZ

FIGURE 118-2ZA

FIGURE 118-2ZB

FIGURE 118-2ZC

FIGURE 118-2ZD

FIGURE 118-2ZE

FIGURE 118-2ZF

FIGURE 118-2ZG

FIGURE 118-2ZH

FIGURE 118-2ZI

FIGURE 118-2ZJ

FIGURE 118-2ZK

FIGURE 118-2ZL

FIGURE 118-2ZM

FIGURE 118-2ZN

FIGURE 118-2ZO

FIGURE 118-2ZP

FIGURE 118-2ZQ

FIGURE 118-2ZR

FIGURE 118-2ZS

FIGURE 118-2ZT

FIGURE 118-2ZU

FIGURE 118-2ZV

FIGURE 118-2ZW

FIGURE 118-2ZX

FIGURE 118-2ZY

FIGURE 118-2ZZ